DECOLOCK DQ2-PAT36V 3-way T-Piece 90°

Universal 2-point truss system in lightweight construction

Art. No.: 60301554
GTIN: 4026397391244

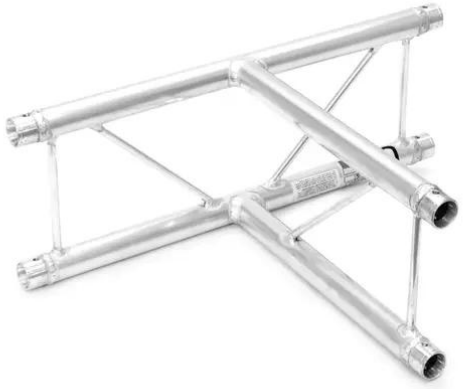

All rights reserved. Subject to change without notice. Errors and omissions excepted.
Illustration only. Actual item may differ from photo.

DECOLOCK DQ2-PAT36V 3-way T-Piece 90°

Universal 2-point truss system in lightweight construction

Art. No.: 60301554
GTIN: 4026397391244

Features:

- Aluminum alloy for a classic high-tech look
- Fast, efficient and reliable assembly via QUICK-LOCK conical connectors
- An extensive selection of lengths, circular and corner elements offers maximum flexibility
- Special designs according to customer specifications on request
- Direction vertical
- Trusspipe: 35 mm
- Any RAL color available on request
- Various versions available
- Made in Europe
- For application areas such as: Shop fitting; trade fair construction; sports centres/gyms; stage; clubs/dancing school; rental; theater; Trade fair and shop fitting; installation

All rights reserved. Subject to change without notice. Errors and omissions excepted.
Illustration only. Actual item may differ from photo.