ALUTRUSS Completion set QUADLOCK 6082 3000mm

Art. No.: 09003510

GTIN:

4-point truss system

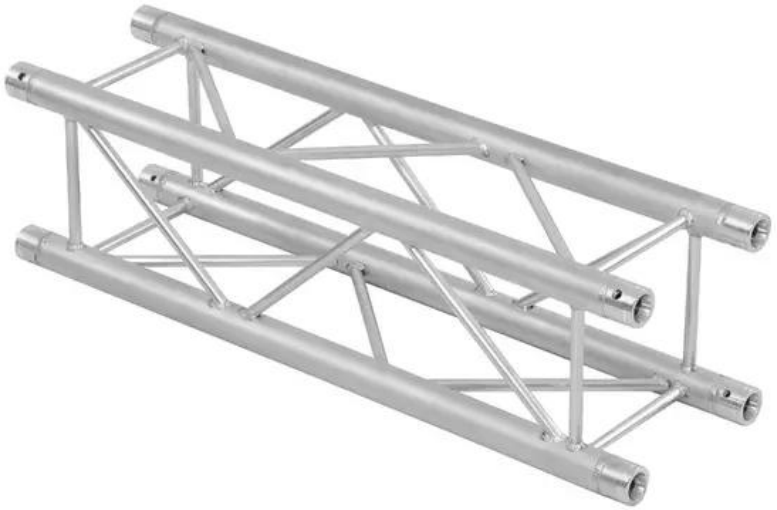

Features:

- Strong EN-AW 6082 alloy for high loads
- High-quality aluminum-tubes with 50 mm in diameter
- Low weight
- Distance center - center: 240 mm
- Easy installation
- Trusspipe: 50 mm
- Suitable for Towertruss TQTR
- Any RAL color available on request
- Available in various colors and sizes
- TÜV Süd certified
- Made in Europe
- For application areas such as: Clubs/dancing school
- For further information about this product, please refer to the Data Sheet under "Downloads"

Logistic

Technical specifications:

Weight:	61.36 kg

ALUTRUSS QUADLOCK 6082-3000 4-way Cross Beam

Eurolite®, Futurelight®, PSSO®, Roadinger®, Alutruss®, Europalms® and Dimavery® are trademarks of Steinigke Showtechnic GmbH, Andreas-Bauer-Straße 5, DE-97297 Waldbüttelbrunn
All rights reserved. Subject to change without notice. Errors and omissions excepted.Illustration only. Actual item may differ from photo.

Setup:	Easy installation
Trusspipe:	50 mm x 2 mm
Welding technique:	TIG-welding
Welding material:	AlMg 5
Alloy:	EN-AW 6082 T6 (AlSi1Mg)
Material:	Aluminum
Color:	Alu colored; any RAL color available on request
Strut diameter x thickness:	16 x 2mm
Dimensions:	Length: 300 cm Width: 29 cm Height: 29 cm
Weight:	15.34 kg

Scope of delivery:

1 x truss
1 x connection set

Eurolite®, Futurelight®, PSSO®, Roadinger®, Alutruss®, Europalms® and Dimavery® are trademarks of Steinigke Showtechnic GmbH, Andreas-Bauer-Straße 5, DE-97297 Waldbüttelbrunn
All rights reserved. Subject to change without notice. Errors and omissions excepted.Illustration only. Actual item may differ from photo.