Completion set QUADLOCK 6082 3000mm

4-point truss system

Art. No.: 09003510
GTIN:

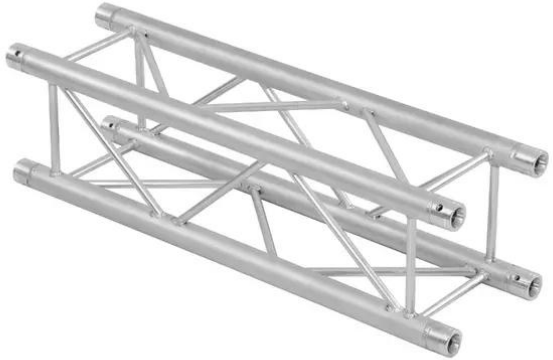

The article is no longer in our assortment.

All rights reserved. Subject to change without notice. Errors and omissions excepted.
Illustration only. Actual item may differ from photo.

Completion set QUADLOCK 6082 3000mm

4-point truss system

Art. No.: 09003510
GTIN:

Features:

- Strong EN-AW 6082 alloy for high loads
- High-quality aluminum-tubes with 50 mm in diameter
- Low weight
- Distance center - center: 240 mm
- Easy installation
- Trusspipe: 50 mm
- Suitable for Towertruss TQTR
- Any RAL color available on request
- Available in various colors and sizes
- TÜV Süd certified
- Made in Europe
- For application areas such as: Clubs/dancing school
- For further information about this product, please refer to the Data Sheet under "Downloads"

All rights reserved. Subject to change without notice. Errors and omissions excepted.
Illustration only. Actual item may differ from photo.