# ALUTRUSS Completion set QUADLOCK 6082 3000mm

4-point truss system

**Art. No.: 09003510**

GTIN:

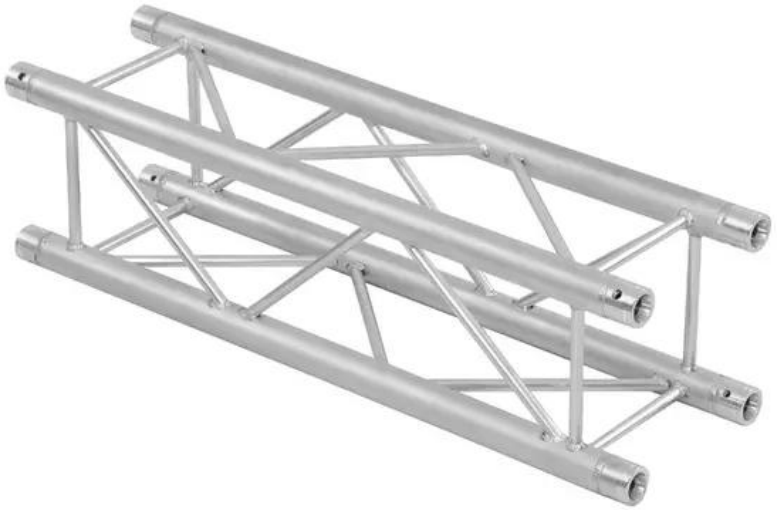

## The article is no longer in our assortment.

### Features:

- Strong EN-AW 6082 alloy for high loads
- High-quality aluminum-tubes with 50 mm in diameter
- Low weight
- Distance center - center: 240 mm
- Easy installation
- Trusspipe: 50 mm
- Suitable for Towertruss TQTR
- Any RAL color available on request
- Available in various colors and sizes
- TÜV Süd certified
- Made in Europe
- For application areas such as: Clubs/dancing school
- For further information about this product, please refer to the Data Sheet under "Downloads"

### Logistic

### Technical specifications:

| | |
|---|---|
| Weight: | 61.36 kg |

**ALUTRUSS QUADLOCK 6082-3000 4-way Cross Beam**

Eurolite®, Futurelight®, PSSO®, Roadinger®, Alutruss®, Europalms® and Dimavery® are trademarks of Steinigke Showtechnic GmbH, Andreas-Bauer-Straße 5, DE-97297 Waldbüttelbrunn
All rights reserved. Subject to change without notice. Errors and omissions excepted.Illustration only. Actual item may differ from photo.

| | |
|---|---|
| Setup: | Easy installation |
| Trusspipe: | 50 mm x 2 mm |
| Welding technique: | TIG-welding |
| Welding material: | AlMg 5 |
| Alloy: | EN-AW 6082 T6 (AlSi1Mg) |
| Material: | Aluminum |
| Color: | Alu colored; any RAL color available on request |
| Strut diameter x thickness: | 16 x 2mm |
| Dimensions: | Length: 300 cm<br>Width: 29 cm<br>Height: 29 cm |
| Weight: | 15.34 kg |

## Scope of delivery:

1 x truss
1 x connection set

Eurolite®, Futurelight®, PSSO®, Roadinger®, Alutruss®, Europalms® and Dimavery® are trademarks of Steinigke Showtechnic GmbH, Andreas-Bauer-Straße 5, DE-97297 Waldbüttelbrunn
All rights reserved. Subject to change without notice. Errors and omissions excepted.Illustration only. Actual item may differ from photo.